ULISSE EVO

PTZ CAMERA WITH HIGH PERFORMANCE AND EXTREME RELIABILITY

FULL HD 1080P | IP66 IP67 IP68 | TYPE 4X TYPE 6P | IK10 | PoE | IP

delux technology

ULISSE EVO + UEBP0FA

ULISSE EVO + UEI8AA+ UEBP0AA+ UEAW

ONVIF | S Q

DESCRIPTION

ULISSE EVO is a PTZ camera that combines high technology, competitiveness and design and guarantees the maximum level of security for monitoring urban areas, critical infrastructures, transport, traffic and railways (it complies with the standards for railway applications)

The Super low-light, Full HD, 1080p, 60 fps IP camera with 30x optical zoom and integrated Delux technology offers unbeatable clear and detailed images with vivid colours, day or night. The camera's motion detection function, with privacy masking feature, allows intelligent management and immediate raising of alarms if an unwanted intrusion is detected.

ULISSE EVO maintains maximum operating efficiency with temperatures from -40°C (-40°F) to +65°C (149°F), while the levels of protection IK10, IP66/IP67/IP68, NEMA Type 4X and Type 6P guarantee maximum resistance against dust and bad weather, strong impact and vandalism.

ULISSE EVO offers an unrivalled corrosion resistance, thanks to the special aluminum surface treatments and the technopolymer used for its construction.

ULISSE EVO is also equipped with a wiper to ensure a clear view in any environmental conditions. An LED illuminator (850nm, 940nm or white light) is available to give visibility even in total darkness. This comes as a separate accessory that can be integrated directly into the unit. The camera will automatically recognise the type of illuminator installed and calibrate the light beam accordingly.

The modern, linear design of ULISSE EVO combines maximum strength and operational reliability with greatly reduced weight. This means easy and quick assembly and therefore lower installation costs and zero maintenance.

ULISSE EVO can be installed in different ways, even in the inverted position typical of the speed domes, using the large variety of brackets and adaptors available to satisfy every installation need. The brackets are also available with quick connectors for Ethernet/PoE, for power and I/O, which allow fast and easy installation and maintenance.

ULISSE EVO is available in two standard colours gray-white (RAL9002) or black (RAL9005) to suit specific application requirements.

MAIN FEATURES

- Camera Full HD 1080p, 30x, 60fps
- Minimum Illumination:
  - Colour: 0.006lx
  - B/W: 0.0006lx
- Video compression H.264/AVC, MJPEG, JPEG and MPEG4
- Complies with ONVIF, Profile S and Profile Q
- Day/Night (Auto ICR: automatic removal of IR filter)
- De-fog function
- Up to 3 simultaneous video streams in FULL HD
- 2 alarm inputs and 2 relay outputs
- Variable speed: from 0.1°/s to 250°/s horizontal and vertical movement
- Horizontal continuous rotation, vertical from -90° to +90°
- Position accuracy: 0.05°
- Up to 250 Presets
- Speed proportional to Zoom
- Power supply: 24Vac, 24Vdc, PoE 90W
- Can be also installed in upside-down position (in speed-dome mode)
- Integrated wiper
- Optional washer system with pump for front window cleaning

Specifications subject to change without notice. © VIDEOTEC S.p.A. All rights reserved. The mentioned names of products or companies are trademarks or registered trademarks.

TECHNICAL DATA

GENERAL

Easy installation thanks to the self-centring connector
Zero backlash
Quick configuration and setup
Dynamic positioning control system
Functions: Preset Tour (Preset, Patrol, Autopan), Autoflip
Maximum number of presets: 250

MECHANICAL

Constructed from aluminium and tecnopolymer
Epoxy-polyester powder painted, standard colours RAL9002 or black (RAL9005)
Horizontal rotation: 360°, continuous rotation
Vertical rotation: from -90° to +90° (with ceiling installation, from -40° to +90°)
Horizontal speed (variable): from 0.1°/s to 250°/s
Tilt speed (variable): from 0.1°/s to 250°/s
Accuracy of preset positions: 0.05°
Cable glands: 2xM16 + 1xM20 + special gasket for RJ45 cables
Unit weight: 7.1kg (15.6lb) (7.4kg (16.3lb) with LED illuminator)

ELECTRICAL

Supply voltage/Current consumption:
- 24Vac ±20%, 5A, 50/60Hz
- 24Vdc ±10%, 5A
- PoE 90W (only with OHEP90INJ or OHEP90INJO accessories)

ECO-MODE function for energy savings: 21W, P&T static
Power consumption:
- 27W, P&T static, heating switched off
- 27W, P&T in motion, heating switched off
- 57W, peak at start-up, heating on and de-icing function

Power consumption with illuminator on:
- 40W, P&T static, heating switched off
- 40W, P&T in motion, heating switched off
- 70W, peak at start-up, heating on and de-icing function

Cables input section: from 0.75mm^2 (18AWG) to 2.5mm^2 (13AWG)
Cables signal section: from 0.14mm^2 (26AWG) to 1mm^2 (17AWG)
Alarm inputs (auto power supply 12-18V): 2
Relay outputs: 2 (1A, 30Vac/30Vdc max)

NETWORK

Ethernet connection: 100 Base-TX
Connector: RJ45

VIDEO

Video encoder
- Communication protocol: ONVIF, Profile S and Profile Q
- Device configuration: TCP/IPv4-IPv6, UDP/IPv4-IPv6, HTTP, HTTPS, NTP, DHCP, WS-DISCOVERY, DSCP, IGMP (Multicast), SOAP, DNS
- Streaming: RTSP, RTCP, RTP/IPv4, HTTP, Multicast
- Video compression: H.264/AVC, MJPEG, JPEG, MPEG4
- 3 independent video streams Full HD
- Image resolution: from 320x180 to 1920x1080 in 6 steps
- Selectable frame rate from 1 to 60 images per second (fps)
- Web Server
- Directional OSD (maximum 4 settable areas)
- Motion Detection
- Privacy zones masking (maximum 8 settable masks)

CAMERAS

Day/Night Full HD 30x

Resolution: Full HD 1080p (1920x1080)
Image Device: 1/2.8" Exmor™ R CMOS sensor
Effective Pixels: approx. 2.38 Megapixels
Minimum Illumination:
- Colour: 0.006lx (F1.6, 30 IRE)
- B/W: 0.0006lx (F1.6, 30 IRE)

Focal length: 4.5 mm (wide) ~ 135 mm (tele)
Zoom: 30x (480x with digital zoom)
Iris: Auto, Manual; range F1.6-F9.6,12 steps
Horizontal Viewing Angle: from 61.6° (wide end) to 2.50° (tele end)
Vertical Viewing Angle: from 37.07° (wide end) to 1.44° (tele end)
Shutter speed: from 1/1s up to 1/10000s; Auto/Manual
White balance: Auto/Manual
Gain: Auto, Manual (from 0dB to 36dB)
Wide Dynamic Range: 120dB
Focus System: Auto, Manual, Trigger
Picture Effects: E-flip, Color enhancement
Noise removal: 2D, 3D
Exposure Control: Auto, Manual, Priority (Shutter priority, Iris priority), Brightness, Custom
De-fog: Yes (On/Off)

ILLUMINATORS

LED illuminator

Wide beam: 40° (horizontal),16° (vertical)
Spot beam: 14° (horizontal), 14° (vertical)
Wavelength: 850nm, 940nm, white light
Wide beam activation: based on the scene brightness, from alarm input or manually
Spot beam activation: can be activated on preset, based on the zoom factor or manually
Automatic and remote switching on
No calibration required for light beam alignment with the camera
The illuminator does not slow down the P&T's rotation speed
Automatic recognition of the type of illuminator installed

Specifications subject to change without notice. © VIDEOTEC S.p.A. All rights reserved. The mentioned names of products or companies are trademarks or registered trademarks.

ENVIRONMENT

For installation indoors and outdoors

Operating temperature

- Continuous functioning: from -40°C (-40°F) to +65°C (149°F) (+50°C (122°F) for versions painted black)
- Temperature test complies with NEMA-TS 2-2003 (R2008) par. 2.1.5.1, test profile fig. 2-1 (from -34°C (-29.2°F) to +74°C (165.2°F))
- De-icing function intervention: from -40°C (-40°F) to -10°C (14°F)

Relative humidity: from 10% to 100%

CERTIFICATIONS

Electrical safety (CE): EN60950-1, IEC60950-1, EN62368-1, IEC62368-1

Electromagnetic compatibility (CE): EN610000-6-4, EN50130-4, EN55032 (Class A)

Outdoor installation (CE): EN60950-22, IEC60950-22

Photobiological safety (CE): EN62471, IEC62471

IP protection degree (EN60529): IP66, IP67, IP68

Salty fog resistance: EN50130-5, EN60068-2-52

IK protection degree: IK10

UL certification (UL60950-1, CAN/CSA C22.2 No. 60950-1-07,UL62368-1 CAN/CSA C22.2 No. 62368-1-14): cULus Listed

Electromagnetic compatibility (North America): FCC part 15 (Class A), ICES-003 (Class A)

Level of protection Type (UL50E): 4X, 6P

EAC certification

CERTIFICATIONS - RAILWAY APPLICATIONS

Compliance to railway application standard: EN50121-4 (the product requires the filter accessory SURGEPR)

ACCESSORIES

UEI8AA	Infrared illuminator 850nm for ULISSE EVO, grey-white (RAL9002)
UEI8FA	Infrared illuminator 850nm for ULISSE EVO, black colour (RAL9005)
UEI9AA	Infrared illuminator 940nm for ULISSE EVO, grey-white (RAL9002)
UEI9FA	Infrared illuminator 940nm for ULISSE EVO, black colour (RAL9005)
UEIWAA	Infrared illuminator white-light for ULISSE EVO, grey-white (RAL9002)
UEIWFA	Infrared illuminator white-light for ULISSE EVO, black colour (RAL9005)
OHEP90INJ	Power Injector PoE (90W), 1 channel, for indoor installations
OHEP90INJO	Power Injector PoE (90W), 1 channel, for outdoor installations
SURGEPR	Lightning surge protection device
UPTIRPS100N	External power supply for ULISSE series, prearranged for two LED illuminators, and control to synchronize IR illuminators with camera Day/Night switching, IN 100Vac, in weatherproof box
UPTIRPS120UL	External power supply for ULISSE series, prearranged for two LED illuminators, and control to synchronize IR illuminators with camera Day/Night switching, IN 120Vac, in weatherproof box. Twilight sensor included.
UPTIRPS230N	External power supply for ULISSE series, prearranged for two LED illuminators, and control to synchronize IR illuminators with camera Day/Night switching, IN 230Vac, in weatherproof box. Twilight sensor included.
WASPT0V5L5M00	Water tank 5l (1.3gal), pump with delivery up to 5m (16ft), IN 230Vac-24Vac-120Vac
WASPT0V23L5M00	Water tank 23l (6gal), pump with delivery up to 5m (16ft), IN 230Vac-24Vac-120Vac
WASPT0V23L11M00	Water tank 23l (6gal), pump with delivery up to 11m (36ft) with water floating, IN 230Vac-24Vac-120Vac
WASPT1V23L30M00	Water tank 23l (6gal), pump with delivery up to 30m (98ft) with water floating, IN 230Vac
WASPT3V23L30M00	Water tank 23l (6gal), pump with delivery up to 30m (98ft) with water floating, IN 120Vac
WASNX1V10L20M00	Tank 10l (2.6gal) with integrated manual pump controlled by solenoid valve, delivery head up to 20m (66ft) max, IN 230Vac
WASNX2V10L20M00	Tank 10l (2.6gal) with integrated manual pump controlled by solenoid valve, delivery head up to 20m (66ft) max, IN 24Vac
WASNX3V10L20M00	Tank 10l (2.6gal) with integrated manual pump controlled by solenoid valve, delivery head up to 20m (66ft) max, IN 120Vac

BRACKETS AND ADAPTORS

UEBP0AA	Parapet bracket with internal cable channel for ULISSE EVO, grey-white (RAL9002)
UEBP0FA	Parapet bracket with internal cable channel for ULISSE EVO, black colour (RAL9005)
UEBP4AA	Parapet bracket with quick connectors RJ45 (Ethernet and PoE) + 4 poles with screw terminal (power supply and I/O) for ULISSE EVO grey-white (RAL9002)
UEBP4FA	Parapet bracket with quick connectors RJ45 (Ethernet and PoE) + 4 poles with screw terminal (power supply and I/O) for ULISSE EVO, black colour (RAL9005)
UEBP7AA	Parapet bracket with quick connectors RJ45 (Ethernet and PoE) + 7 poles to weld (power supply and I/O) for ULISSE EVO, grey-white (RAL9002)
UEBP7FA	Parapet bracket with quick connectors RJ45 (Ethernet and PoE) + 7 poles to weld (power supply and I/O) for ULISSE EVO, black colour (RAL9005)
UEBWAA	Wall bracket fo ULISSE EVO, grey-white (RAL9002)
UEBWFA	Wall bracket fo ULISSE EVO, black colour (RAL9005)
UEAP	Pole adaptor in stainless steel AISI 316L
UEAC	Corner adaptor in stainless steel AISI 316L
UEAW	Counter-plate in stainless steel AISI 316L

PACKAGE

Model Number	Weight	Dimensions (WxHxL)	Master carton
UE21A000A	9.2kg (20.3lb)	27x30x50cm (10.6x11.8x19.6in)	-

Specifications subject to change without notice. © VIDEOTEC S.p.A. All rights reserved. The mentioned names of products or companies are trademarks or registered trademarks.

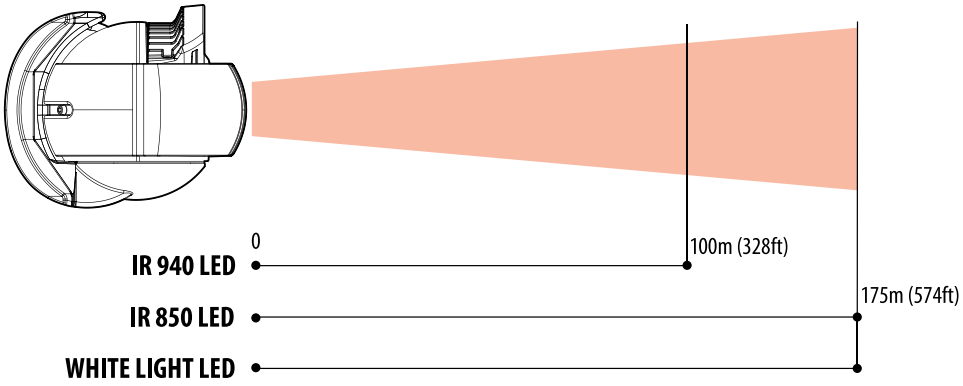

The distances and the performance depend on the environmental light conditions.

ULISSE EVO - CONFIGURATION OPTIONS					
	Voltage	Camera	Colour		
UE	**2** 24Vac, 24Vdc, PoE 90W	**1** Videotec super low-light Day/Night 30X zoom, Full HD camera	**A** RAL9002	**000** With wiper	**A**
			F RAL9005		

TECHNICAL DRAWINGS

The indicated measurements are expressed in millimetres.

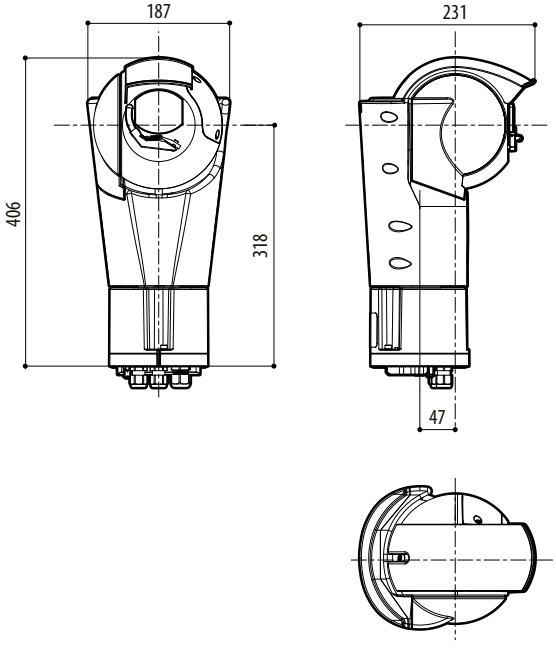

ULISSE EVO

Specifications subject to change without notice. © VIDEOTEC S.p.A. All rights reserved. The mentioned names of products or companies are trademarks or registered trademarks.

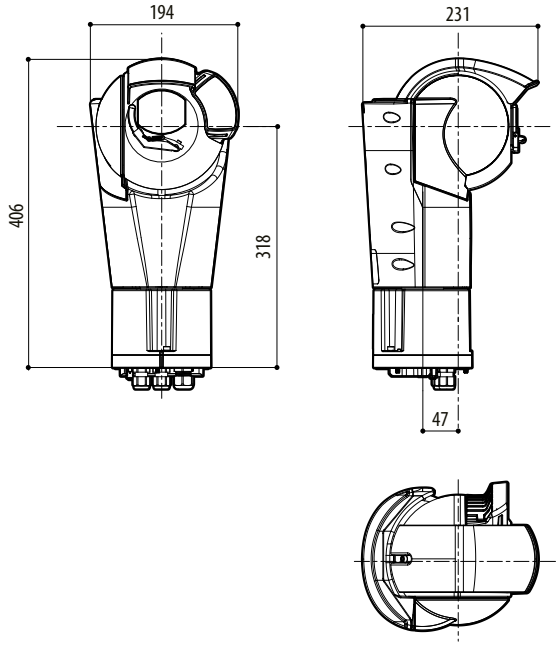

ULISSE EVO WITH LED ILLUMINATOR

Specifications subject to change without notice. © VIDEOTEC S.p.A. All rights reserved. The mentioned names of products or companies are trademarks or registered trademarks.