SPECIFICATION-2 (Power, I/O, Video Signal, Audio and Other)

Model Number		ZN-D5DMP58LHE	ZN-D6DMP55LHE	ZN-D5DTMP58LHE	ZN-D6DTMP55LHE
Power	DC	12VDC			
	AC	24VAC			
	PoE	IEEE 802.3af Class3			
	Power Consumption	710mA @ 12VDC, 8.6W, 570mA @ 24VAC, 8.1W, 160mA @ PoE, 7.7W	730mA @ 12VDC, 8.8W, 600mA @ 24VAC, 8.5W, 160mA @ PoE, 7.7W	830mA @ 12VDC, 9.9W, 830mA @ 24VAC, 12.5W, 242mA @ PoE, 11.6W	850mA @ 12VDC, 10.2W, 880mA @ 24VAC, 13.2W, 250mA @ PoE, 12W
	Heater	-		YES	
I/O	microSD Card, Max Memory Size	SD / SDHC, up to 32GB			
	Analog Video Out, (Installation Only)	CVBS Output, Stereo Jack			
	Alarm In	1			
	Alarm Out	1(relay)			
	RS-485	-			
Analog (Installation Only)	Video Signal	NTSC/PAL selectable			
	Monitor Output	Composite Output(BNC), 75 ohm 1Vpp			
	Scanning Frequency	NTSC: (H)15.734kHz, (V)59.94Hz, PAL: (H)15.625 kHz, (V)50 Hz			
Audio	Audio In	1x Line in			
	Audio Out	1x Line out			
	Audio CODEC	G.711 u-law 8kHz			
Others	FAN	-		1	
	Ambient Temperature	0°C ~ 40°C, (32°F~104°F)		-40°C ~ 50°C, (-40°F~122°F)	
	Ambient Humidity	less than 90%, Non-condensing			
	Materials	Poly Cabonate		Aluminum Diecasting	
	Weight	554g		1.21kg	
	Dimensions, (W x H x D)	ø151 X 100(H), ø90(DOME) mm ø5.9 X 3.9(H), ø3.5(DOME) inch		ø135 X 145(H), ø90(Dome) mm ø5.3 X 5.7(H), ø3.5(Dome) inch	
	IK Rating	-		IK10	
	IP Rating	-		IP66	

COMPATIBLE WITH:

Check our website or contact customer service for most updated information.

GANZ ZNS SERIES GANZ VISION ONVIF

ACCESSORIES

Bracket

Model	ZNA-CMB3A	ZNA-ICB3A	ZNA-WMB3A
Type	Pendant Mount Bracket	In-ceiling Mount Bracket	Wall Mount Bracket

CBC GROUP GANZ

CBC Co.,Ltd.
TOKYO Head Office Image and Information Technology Division
Ganz Global Brand Center

http://www.ganz-global.com/

UPDATE: Feb. 2016

*Exact products and specifications shown may vary by geographic and subject to change without notice. Actual products may differ from the images appearing in the specification sheet.

CBC GROUP

GANZ SPECIFICATIONS

http://www.ganz-global.com

PixelPro Network Camera
3/5 Megapixel Dome Series

GANZ PixelPro

Features:

- 3 and 5 megapixel resolution
- Progressive scan CMOS sencor
- 3-10.5mm(3megapixel)/3.6-10mm(5megapixel) varifocal lens
- Proset system allows you to zoom and focus directly from your PC
- True WDR (Wide Dynamic Range)
- True Day/Night performance
- 18 IR LEDs
- DPC (Defective Pixel Correction) available
- Triple power (12VDC/24VAC/PoE)
- Dual streaming video
- External alarm I/O

CBC Co.,Ltd.
Ganz Global Brand Center

SPECIFICATION-1 (Camera, Lens and Network)

Model Number		ZN-D5DMP58LHE	ZN-D6DMP55LHE	ZN-D5DTMP58LHE	ZN-D6DTMP55LHE
Camera	Image Sensor	1/2.8" Sony ExmorR CMOS	1/1.8" Sony ExmorR CMOS	1/2.8" Sony ExmorR CMOS	1/1.8" Sony ExmorR CMOS
	Max. Resolution & frame rate	2048 x 1536 30fps, 1920 x 1080 60fps	2592 x 1944 30fps, 1920 x 1080 60fps	2048 x 1536 30fps, 1920 x 1080 60fps	2592 x 1944 30fps, 1920 x 1080 60fps
	Effective Pixels (H x V)	2064 x 1552 (3.20M)	2609 x 1960 (5.11M)	2064 x 1552 (3.20M)	2609 x 1960 (5.11M)
	Effective Image Size (mm ; H x V, Diag)	5.16 x 3.88, 6.46 mm	6.26 x 4.70, 7.83mm (1/2")	5.16 x 3.88, 6.46 mm	6.26 x 4.70, 7.83mm (1/2")
	Day & Night	Removable IR Cut Filter			
	D->N threshold	SW selectable			
	N->D threshold	SW selectable			
	IR LED Number	18			
	IR LED Lighting	Auto / Off			
	Adaptive IR	ON / OFF			
	Min. illumination	0 lx with IR LED ON			
	WDR	True-WDR			
	White Balance	ATW / MANUAL(PRESET)			
	AGC	Yes			
	S/N ratio	48 dB or more			
	BLC(Back Light Compensation)	Yes			
	Defog	Yes			
	e-Shutter Speed (Manual)	1/4~1/2000			
	e-Shutter Speed (Auto)	1/25(30)~1/5000			
	Slow Shutter	Off, x2, x4, x8			
	3D DNR	Yes (Depends on Codec Configuration)			
	Privacy Mask	4 area (8 color)			
Lens	Lens	Motorized with P-iris, f=3~10.5mm, F1.4	Motorized with P-iris, f=3.6~10mm, F1.5	Motorized with P-iris, f=3~10.5mm, F1.4	Motorized with P-iris, f=3.6~10mm, F1.5
	Iris	P-iris			
	Optical Zoom	3.5x	2.7x	3.5x	2.7x
	Field of View (H/V/D)	84 / 61 / 94° (wide), 30 / 23 / 37° (tele)	81 / 60 / 92° (wide), 37 / 27 / 44° (tele)	84 / 61 / 94° (wide), 30 / 23 / 37° (tele)	84 / 61 / 94° (wide), 30 / 23 / 37° (tele)
Network	Network	10BASE-T, 100BASE-TX, RJ45			
	Image Compression	H.264, MJPEG : Image quality: 100 Steps(Q value)			
	Resolution	2048 x 1536, 1920 x 1080(Full HD), 1280 x 1024(SXGA), 1024x768(XGA), 1280 x 720(720p), 640 x 480(VGA), 640x360(HVGAW), 704x480/576(4CIF), 352x240/288(CIF)	2592 x 1944, 2304 x 1296, 2048 x 1536, 1920 x 1080(Full HD), 1280 x 1024(SXGA), 1024x768(XGA), 1280 x 720(720p), 640 x 480(VGA), 640x360(HVGAW), 704x480/576(4CIF), 352x240/288(CIF)	2048 x 1536, 1920 x 1080(Full HD), 1280 x 1024(SXGA), 1024x768(XGA), 1280 x 720(720p), 640 x 480(VGA), 640x360(HVGAW), 704x480/576(4CIF), 352x240/288(CIF)	2592 x 1944, 2304 x 1296, 2048 x 1536, 1920 x 1080(Full HD), 1280 x 1024(SXGA), 1024x768(XGA), 1280 x 720(720p), 640 x 480(VGA), 640x360(HVGAW), 704x480/576(4CIF), 352x240/288(CIF)
	Digital Zoom	2 ~ 10x(Client Software)			
	Protocol	IPv4, HTTP, SMTP, UPnP, DNS, RTSP, DDNS, RTP, TCP, UDP, RTCP, DHCP, ARP, FTP, IGMP, ICMP, NTP			
	Max Connections	Unicast : 10, Multicast: Unlimited			
	Frame Rate	1fps ~ 25fps / 1fps ~ 50fps ;50Hz, 1fps ~ 30fps / 1fps ~ 60fps ;60Hz			
	Web Browser	Internet Explorer 9.0 or above, Firefox, Chrome. Smart Phone (iOS, Android)			
	Security	Password Protection			
	SDK(API)	HTTP based API, ONVIF Profile S			
	VMD, (Video Motion Detection)	User set 4 ROI(Region Of Interest), 30 Step Sensitivity			
	ROI	TBD			
	Recording	Snapshot (microSD Card)			
	Alarm Trigger	VMD, External Alarm input			
	Alarm Event	E-mail notification(Snapshot), FTP transfer(Snapshot), External Alarm Out			
	Defective Pixel Correction	Yes (On the fly)			
	Streaming	Dual Stream			
	Tamper Detection	-			
	Multi Language	Yes			

DIMENSIONS (Unit:mm)

Camera Unit

[ZN-D5DMP58LHE, ZN-D6DMP55LHE]

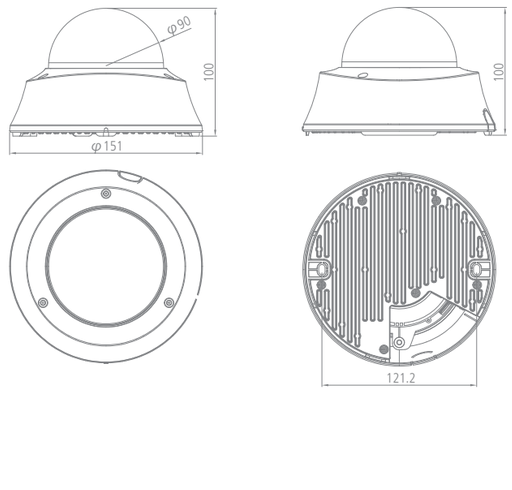

[ZN-D5DTMP58LHE, ZN-D6DTMP55LHE]

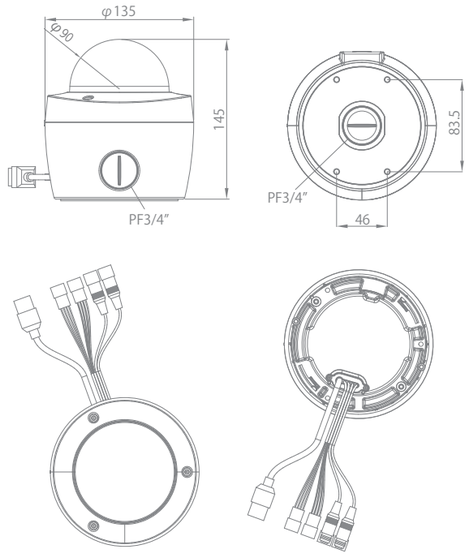

With Bracket (ZN-D5DTMP58LHE, ZN-D6DTMP55LHE)

[In-ceiling Mount]

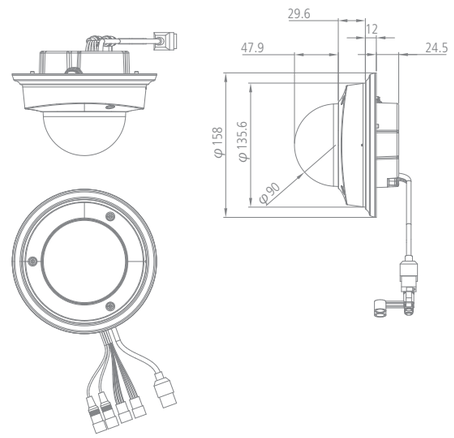

[Wall Mount]

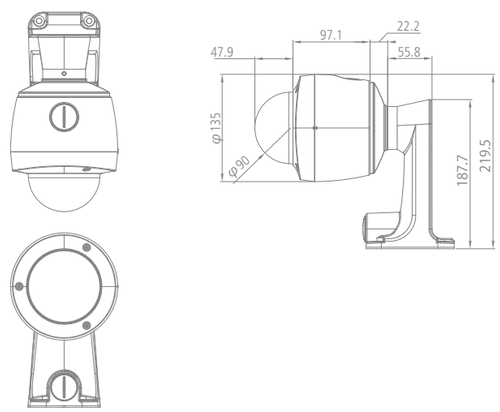
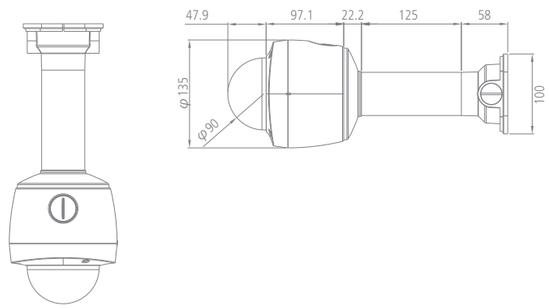
[Pendant Mount]