computar

H60Z1238A-IR

60X 12.5mm - 750mm F3.8
for 1/2 type Cameras, Motorized Zoom
C-Mount, W/2X Extender (25mm-1500mm)
IR cut filter (when select normal mode)
IR focus shift adjustment (For 850nm, 880nm, 950nm)

with Video Auto Iris

Model No.		H60Z1238A-IR		Effective Lens Aperture	Front	φ98.8mm	
Focal Length		12.5mm - 750mm			Rear	φ 13.6 mm	
		25mm-1500mm (with 2x extender.)		Back Focal Length		53.23mm	
Max. Aperture Ratio		1:3.8					
Max. Image Format		6.4mm x 4.8mm(φ8mm)		Flange Back Length		17.526mm	
Operation Range	Iris	F3.8 - F3000		Mount		C-Mount	
	Focus	5m - Inf.		Filter Size		M107 P= 1mm	
	Zoom	12.5mm - 1500mm		Tripod Screw		2 x 1/4-20 UNC	
Control	Iris	Video Auto Iris, Over ride Manual		Dimensions		W154mm x H137mm x D354mm	
	Focus	Motorized		Weight		5200g	
	Zoom	Motorized					
Object Dimension at M.O.D.	12.5mm	246.5cmX184.9cm		25mm		123.3cmX92.4cm	
	750mm	4.1cmX3.1cm		1500mm		2.1cm X1.5cm	
Angle of View (w/o Extender)	D	1/2 type	35.5° - 0.62°	1/3 type	26.1° - 0.47°	1/4 type	20.4° - 0.35°
	H		28.7° - 0.48°		21.7° - 0.37°		16.4° - 0.28°
	V		21.7° - 0.37°		16.4° - 0.28°		12.3° - 0.20°
		Iris		Focus		Zoom	
Supply Voltage		DC12V (9-15)V		DC6/12V switchable		DC6/12V switchable	
Current		50mA or less		90mA or less		90mA or less	
Response Time		0.5 sec.		Approx. 6 sec.		Approx. 5 sec.	
Preset Potentiometer		-		10kΩ0.5W		10kΩ0.5W	
Light Weighting method		Adjustable between Average-Peak (to be set at Average at Factory)					
Input Signal		Video Signal (V. or V.S.)					
Iris Accuracy		±3.5% at A.P.L 0.5V					
Sensitivity Adjustment		0.5V(p-p) - 0.9V(p-p) (Video Signal)					
Input Impedance		High Impedance100kΩ					
Operating Temperature		-10°C - +50°C					

1/2 type

C

Dimensions

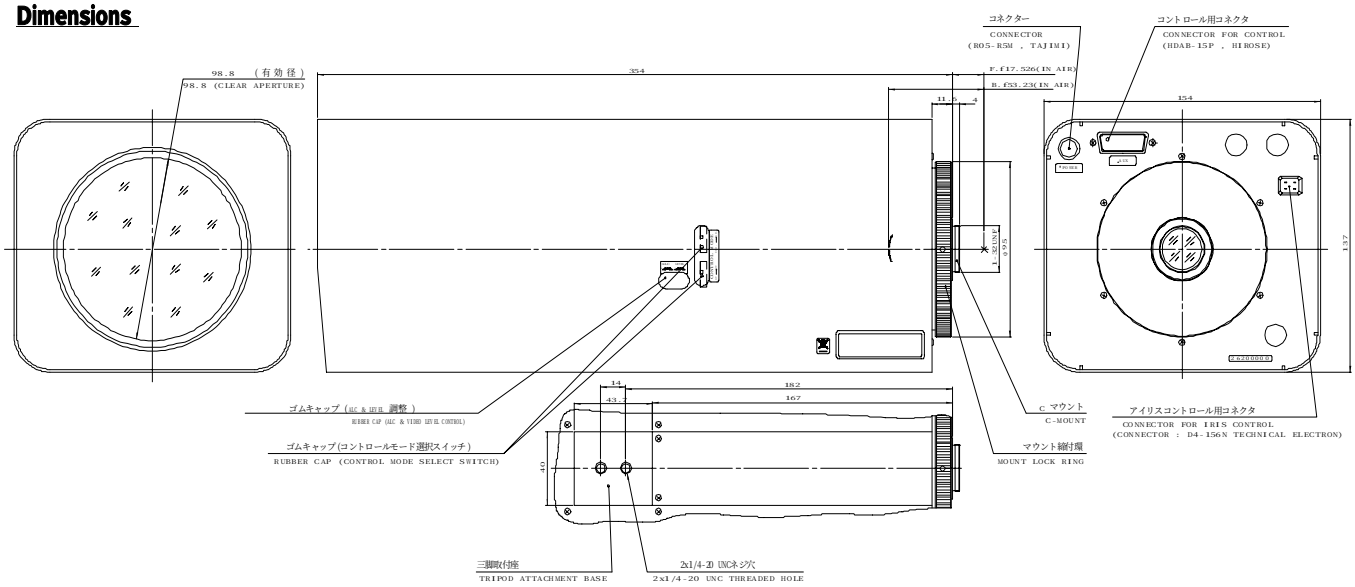

Wiring Diagram

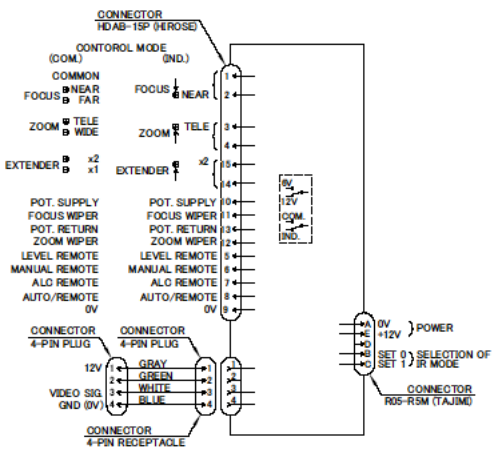

Specification is subject to change without any notice.

2009.08